7. CIRCUIT DIAGRAM

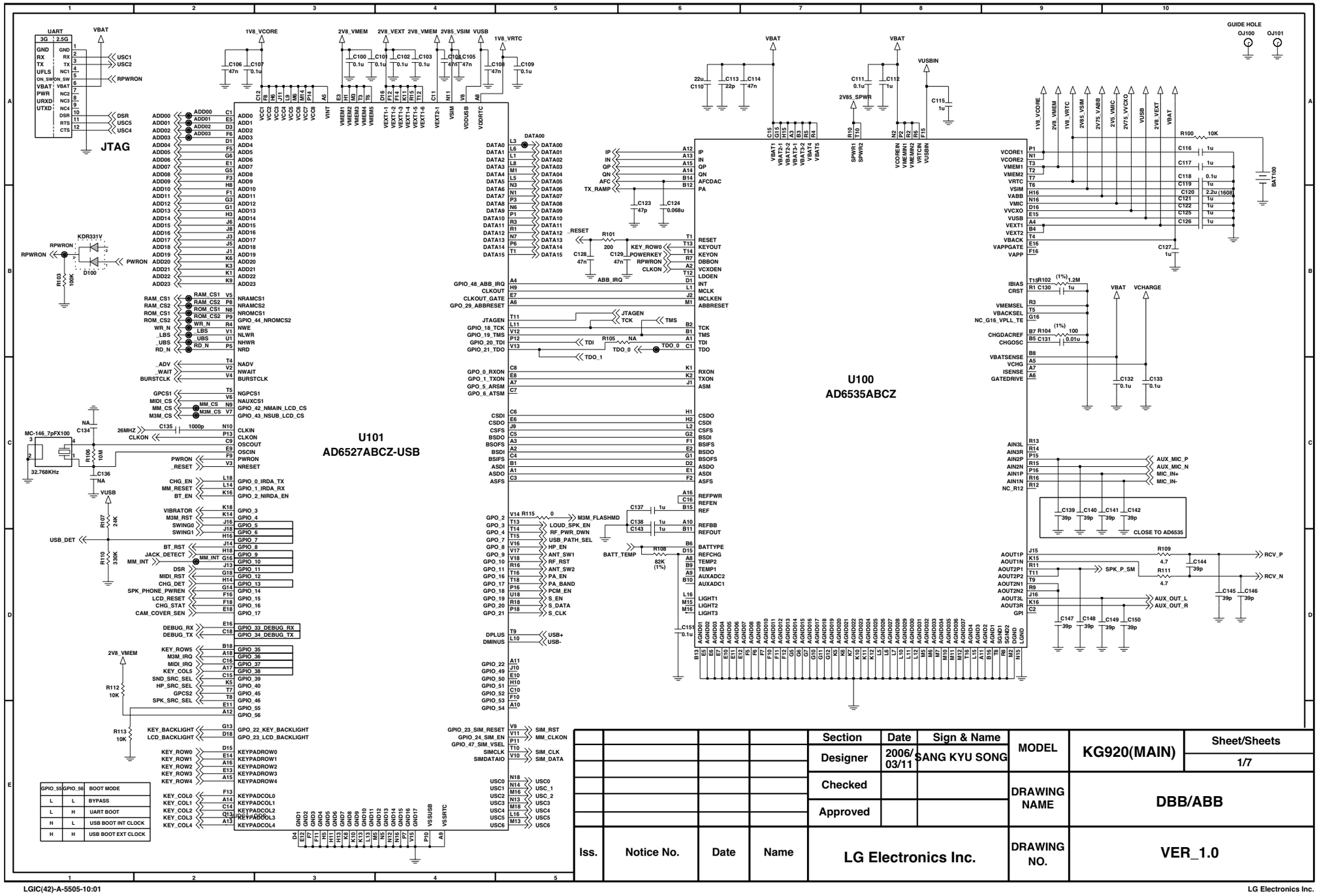

7. CIRCUIT DIAGRAM

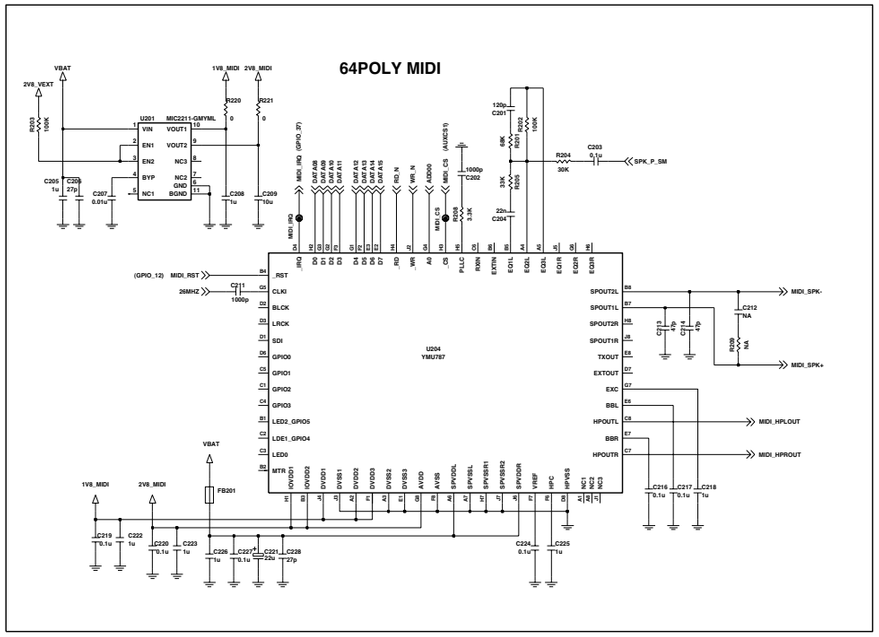

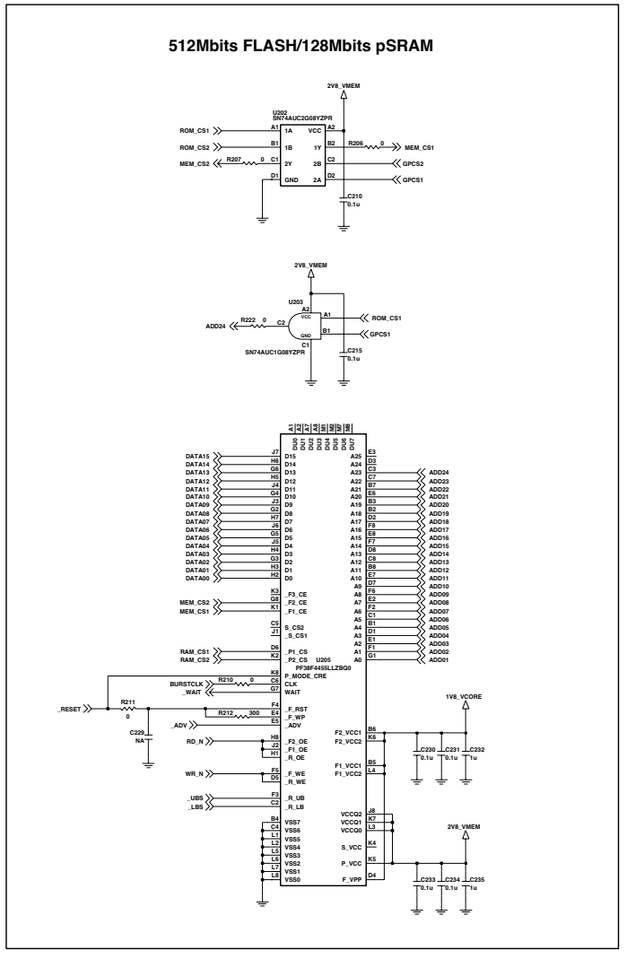

				Section	Date	Sign & Name	MODEL	KG920(MAIN)	Sheet/Sheets
				Designer	2006/03/11	SANG KYU SONG			2/7
				Checked			DRAWING NAME	MEMORY/MIDI	
				Approved					
Iss.	Notice No.	Date	Name	LG Electronics Inc.			DRAWING NO.	VER_1.0	

LGIC(42)-A-5505-10:01

LG Electronics Inc.

7. CIRCUIT DIAGRAM

BLUETOOTH

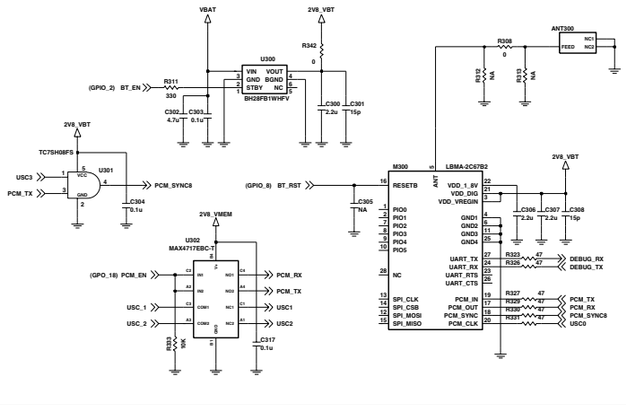

I/O CONNECTOR INTERFACE

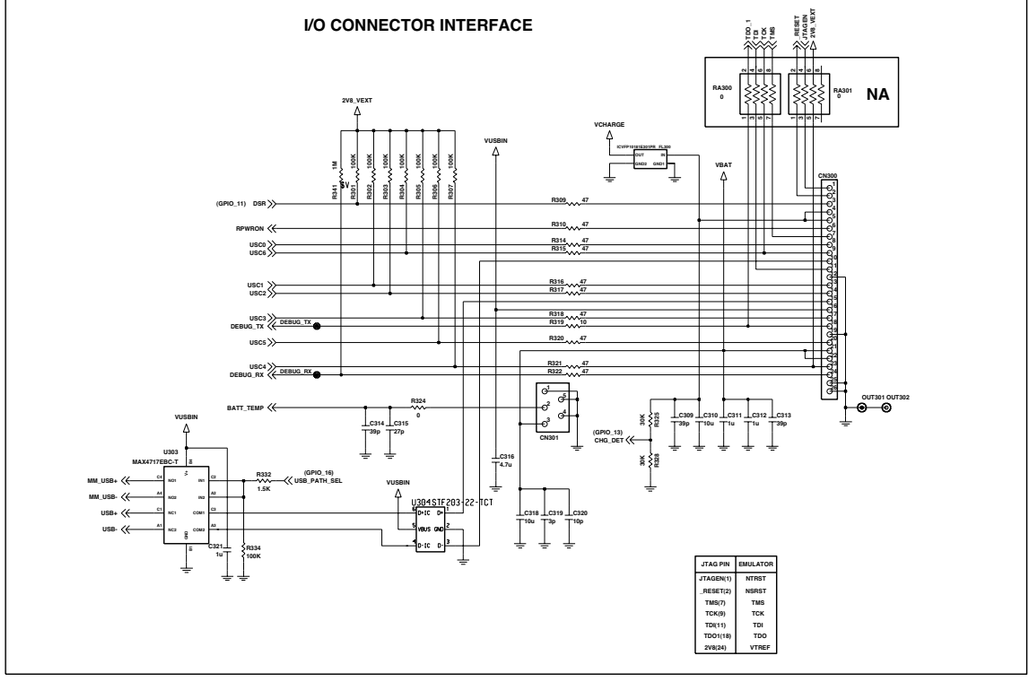

JTAG PIN	EMULATOR
JTAGEN(1)	NTRST
RESET(12)	NSRST
TMS(7)	TMS
TCK(9)	TCK
TDI(11)	TDI
TDO1(18)	TDO
2V8(24)	VTREF

FLIP SWITCH

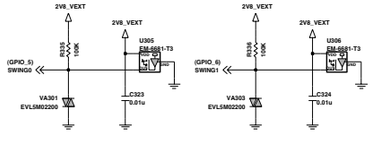

	SWING0	SWING1
0	HIGH	LOW
180	LOW	HIGH

SIM CONNECTOR

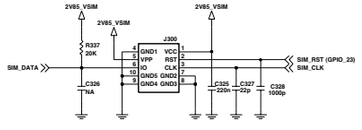

VIBRATOR

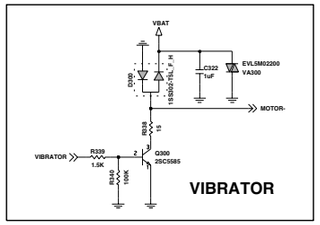

				Section	Date	Sign & Name	MODEL	KG920(MAIN)	Sheet/Sheets
				Designer	2006/03/11	SANG KYU SONG			3/7
				Checked			DRAWING NAME	BLUETOOTH/IO CONNECTOR	
				Approved					
Iss.	Notice No.	Date	Name	LG Electronics Inc.			DRAWING NO.	VER_1.0	

LGIC(42)-A-5505-10:01

LG Electronics Inc.

7. CIRCUIT DIAGRAM

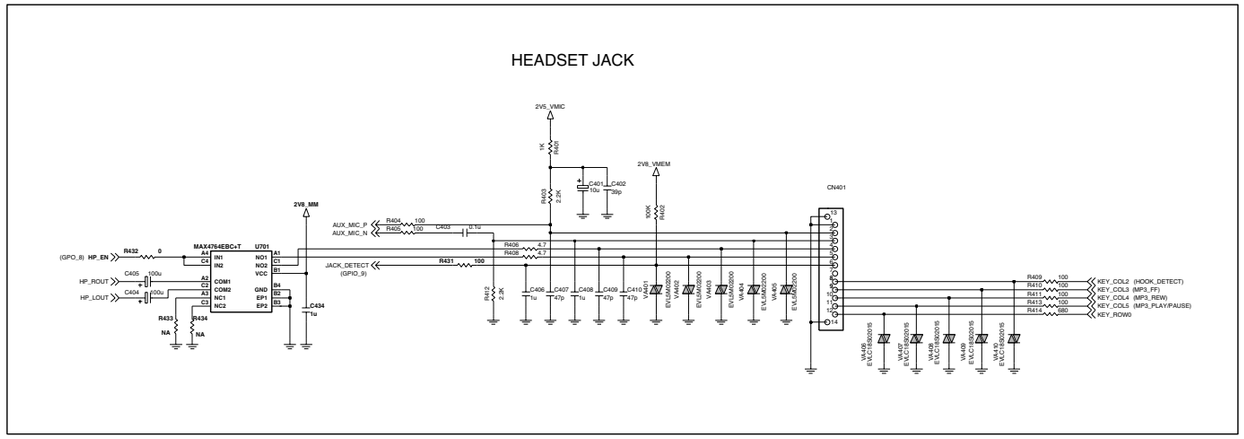

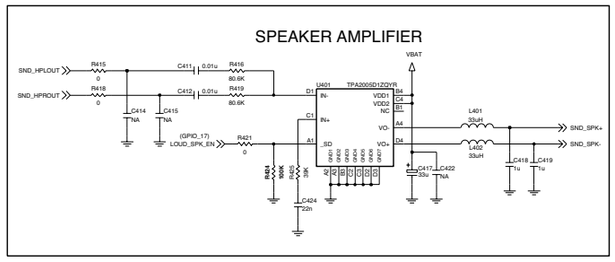

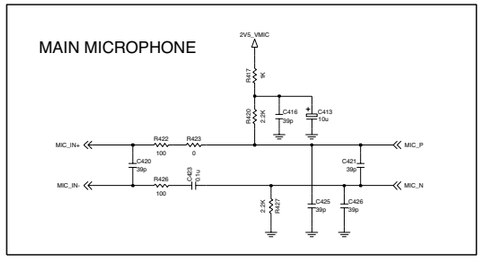

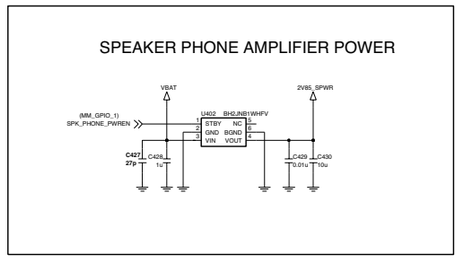

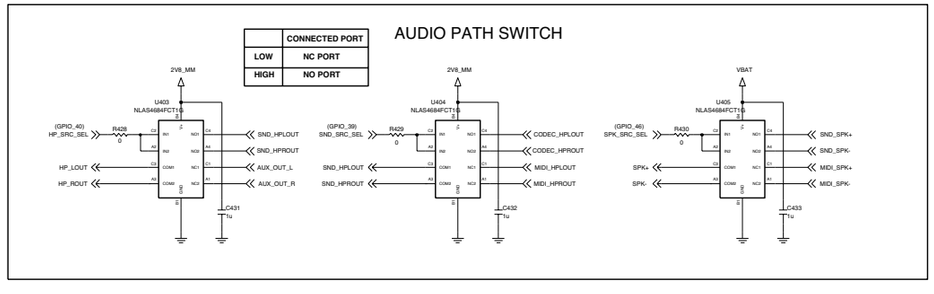

				Section	Date	Sign & Name	MODEL	KG920(MAIN)	Sheet/Sheets
				Designer	2006/03/11	SANG KYU SONG			4/7
				Checked			DRAWING NAME	AUDIO PART	
				Approved					
Iss.	Notice No.	Date	Name	LG Electronics Inc.			DRAWING NO.	VER_1.0	

LGIC(42)-A-5505-10:01

LG Electronics Inc.

7. CIRCUIT DIAGRAM

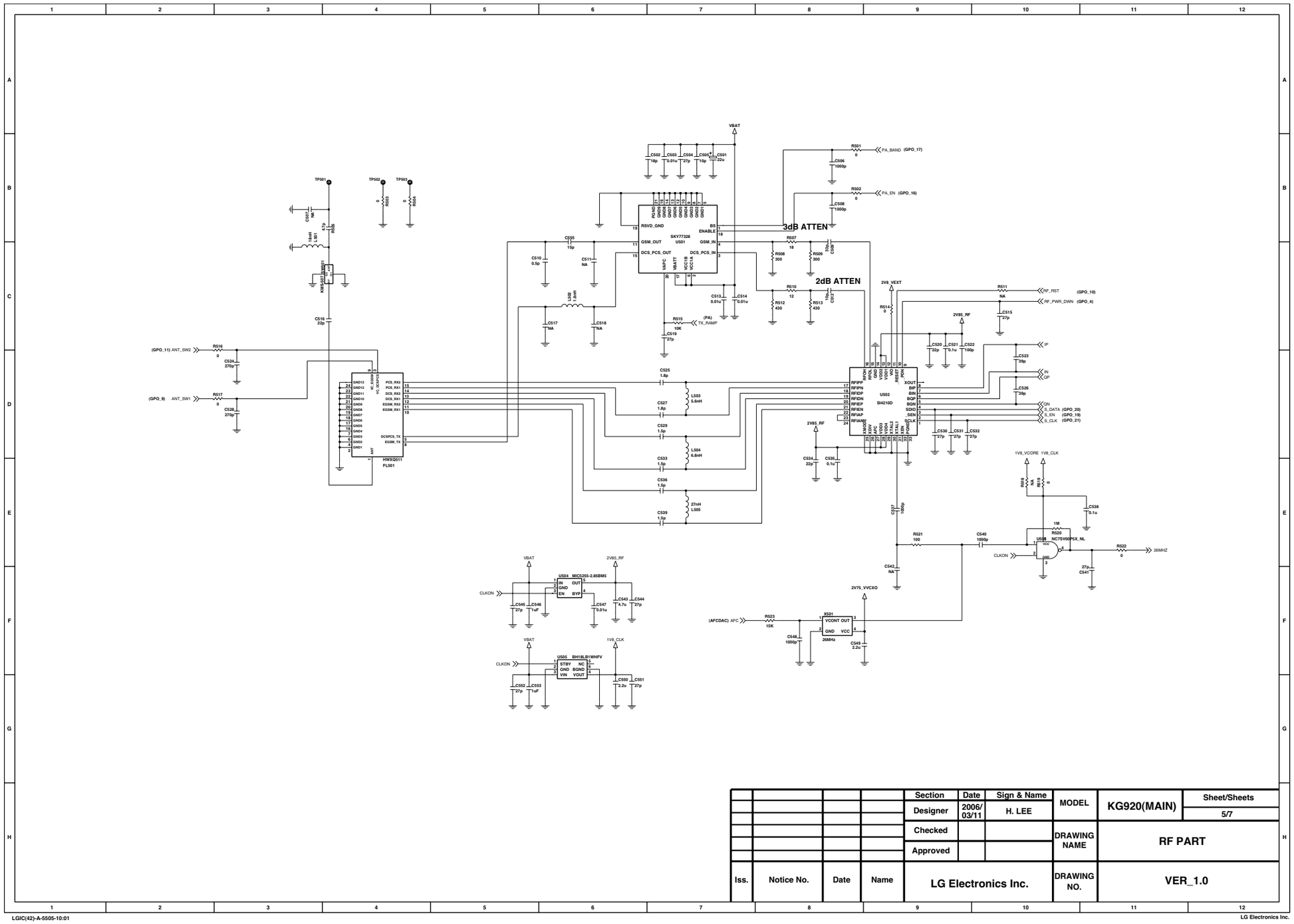

7. CIRCUIT DIAGRAM

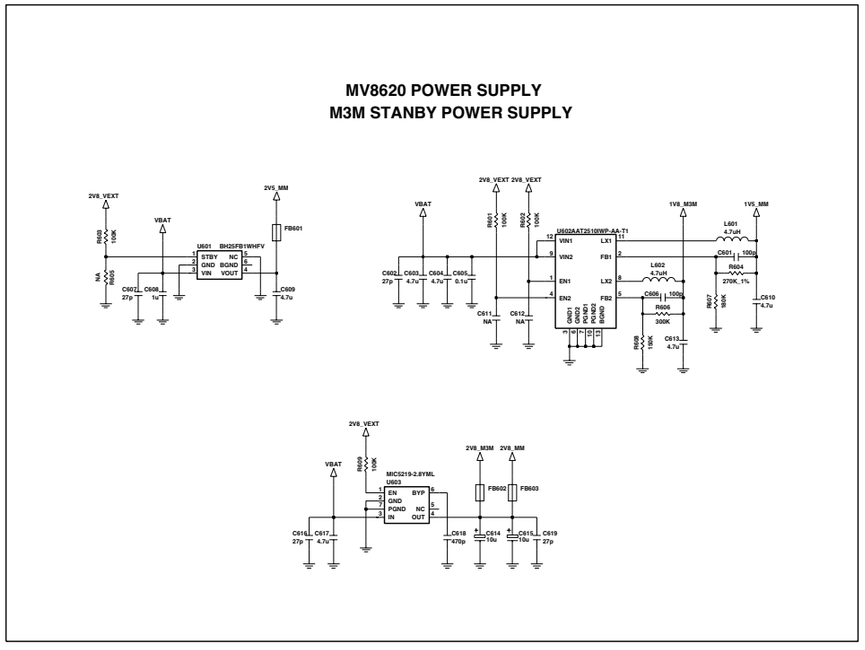

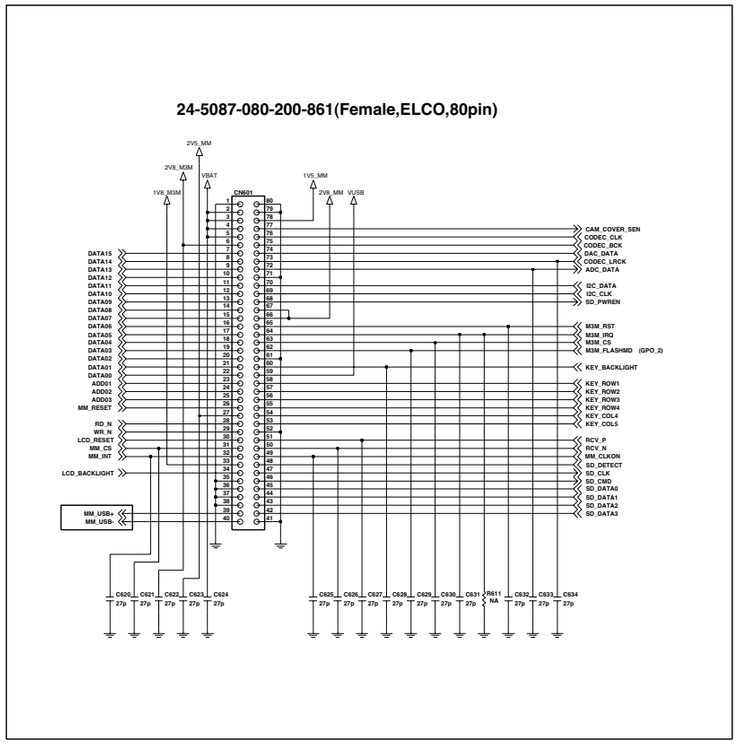

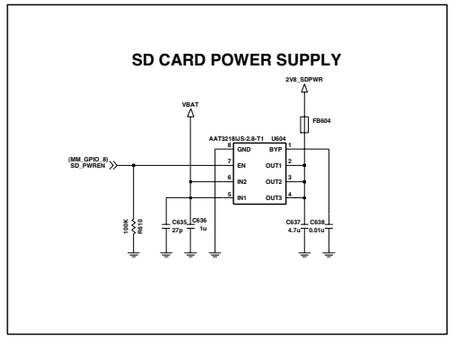

				Section	Date	Sign & Name	MODEL	KG920(MAIN)	Sheet/Sheets
				Designer	2006/03/11	SANG JO RYU			6/7
				Checked			DRAWING NAME	MV8620, AUDIO CODEC	
				Approved					
Iss.	Notice No.	Date	Name	LG Electronics Inc.			DRAWING NO.	VER_1.0	

LG(42)-A-5505-10:01

LG Electronics Inc.

7. CIRCUIT DIAGRAM

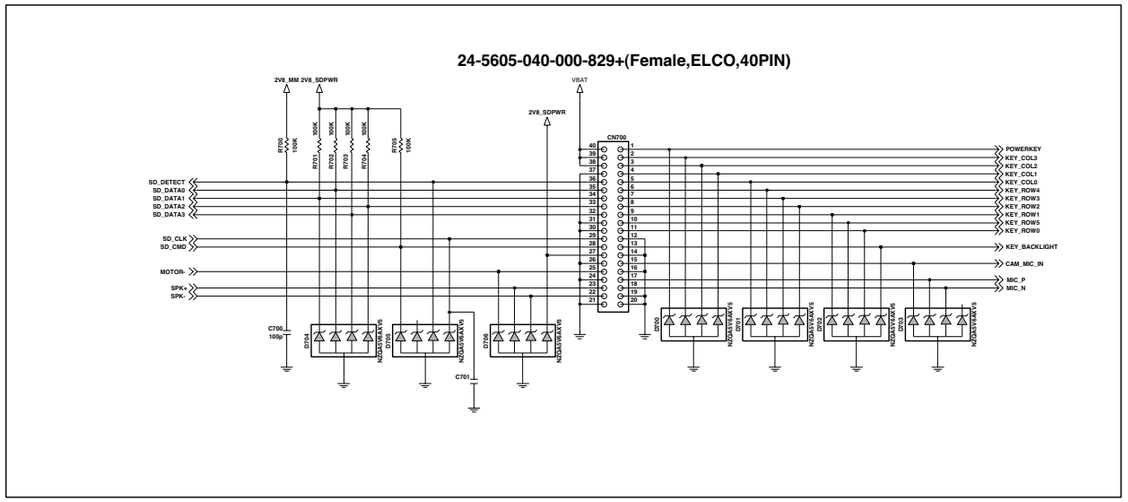

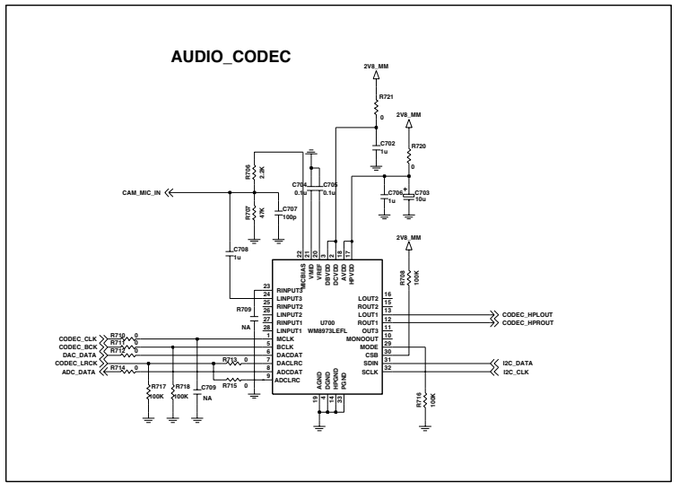

				Section	Date	Sign & Name	MODEL	KG920(MAIN)	Sheet/Sheets
				Designer	2006/03/11	SNAG JO RYU			7/7
				Checked			DRAWING NAME	CONNECTOR, LDO	
				Approved					
Iss.	Notice No.	Date	Name	LG Electronics Inc.			DRAWING NO.	VER_1.0	

LGIC(42)-A-5505-10:01

LG Electronics Inc.

7. CIRCUIT DIAGRAM

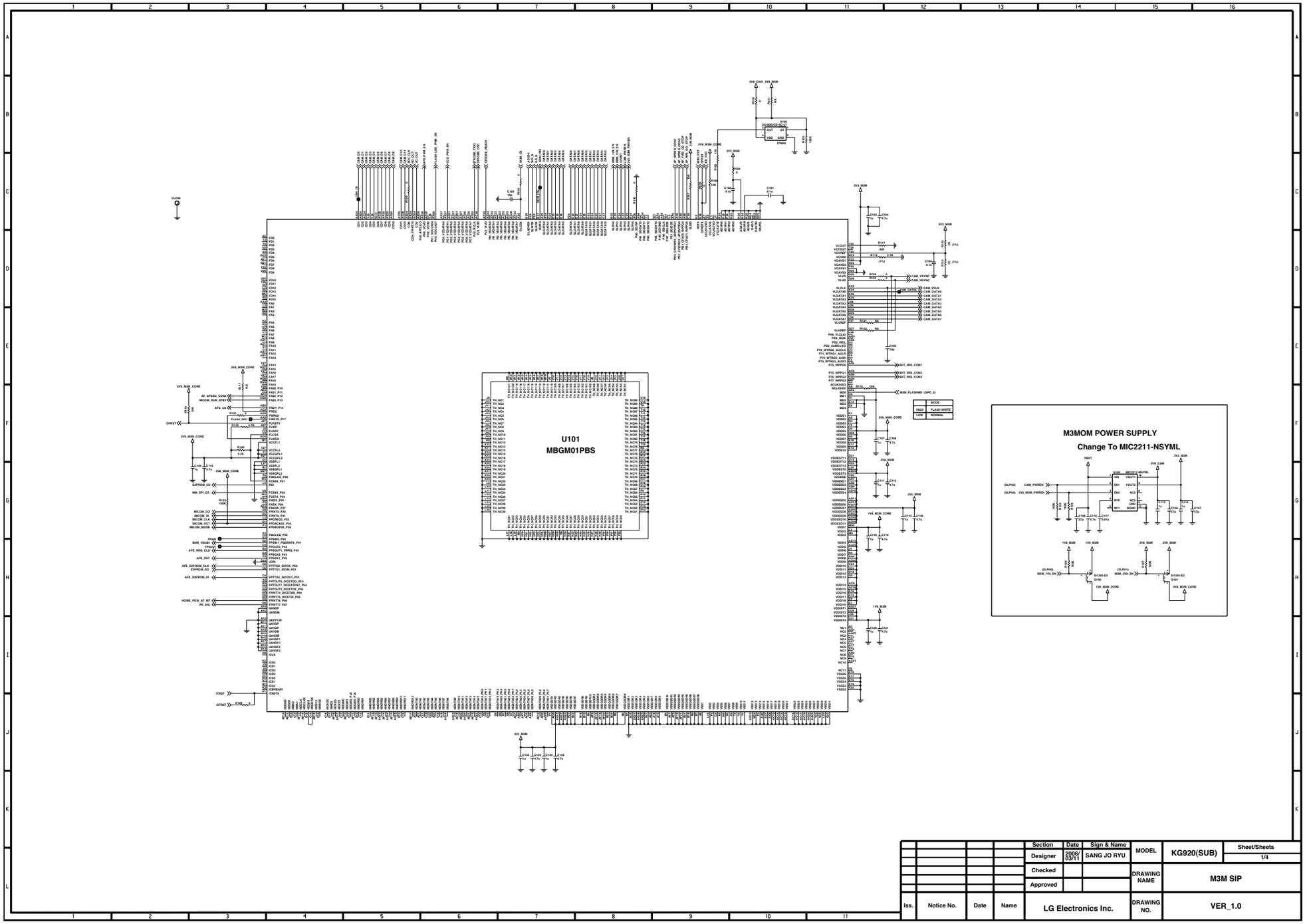

8. PCB LAYOUT

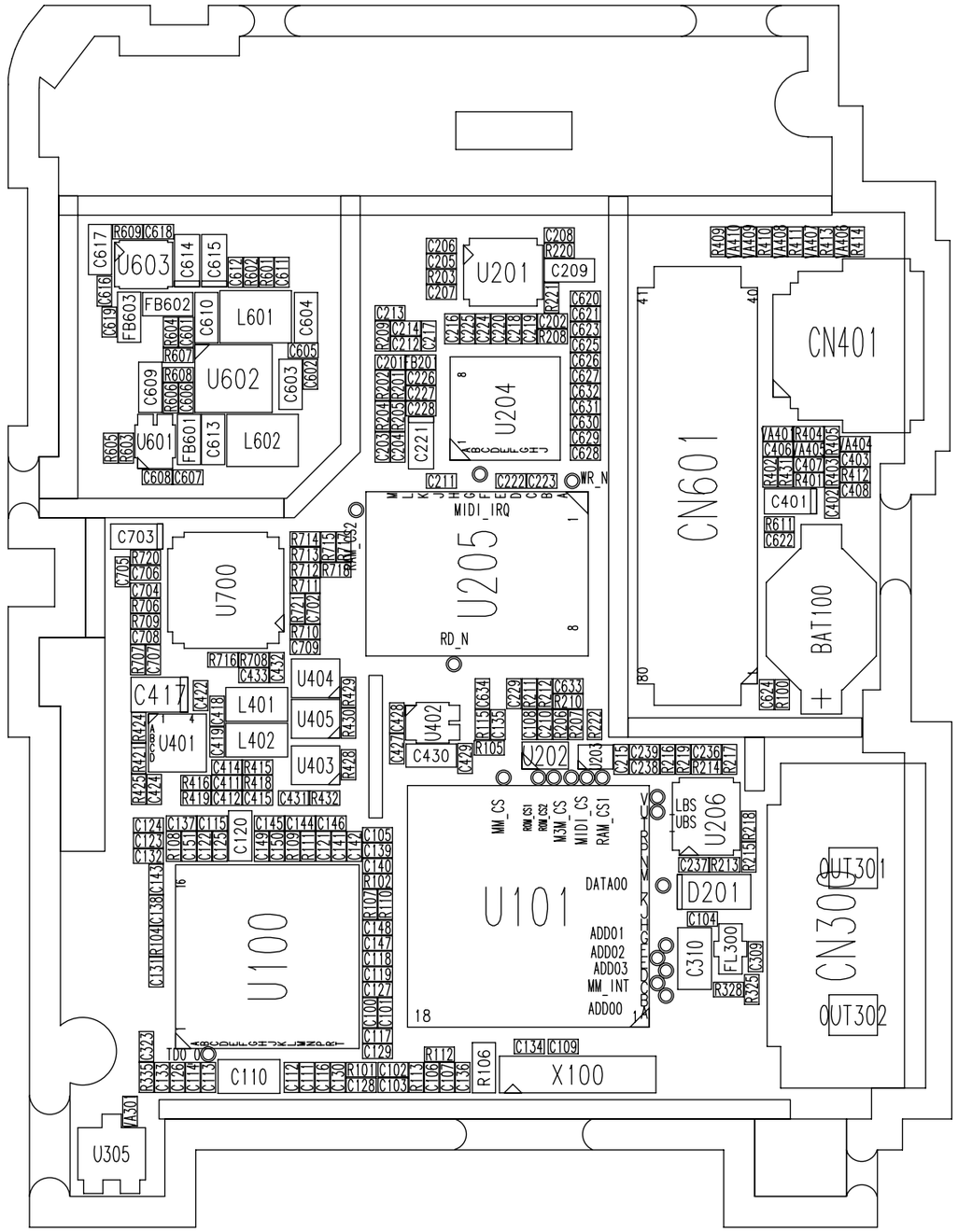

KG920 MAIN-1.0-TOP

8. PCB LAYOUT

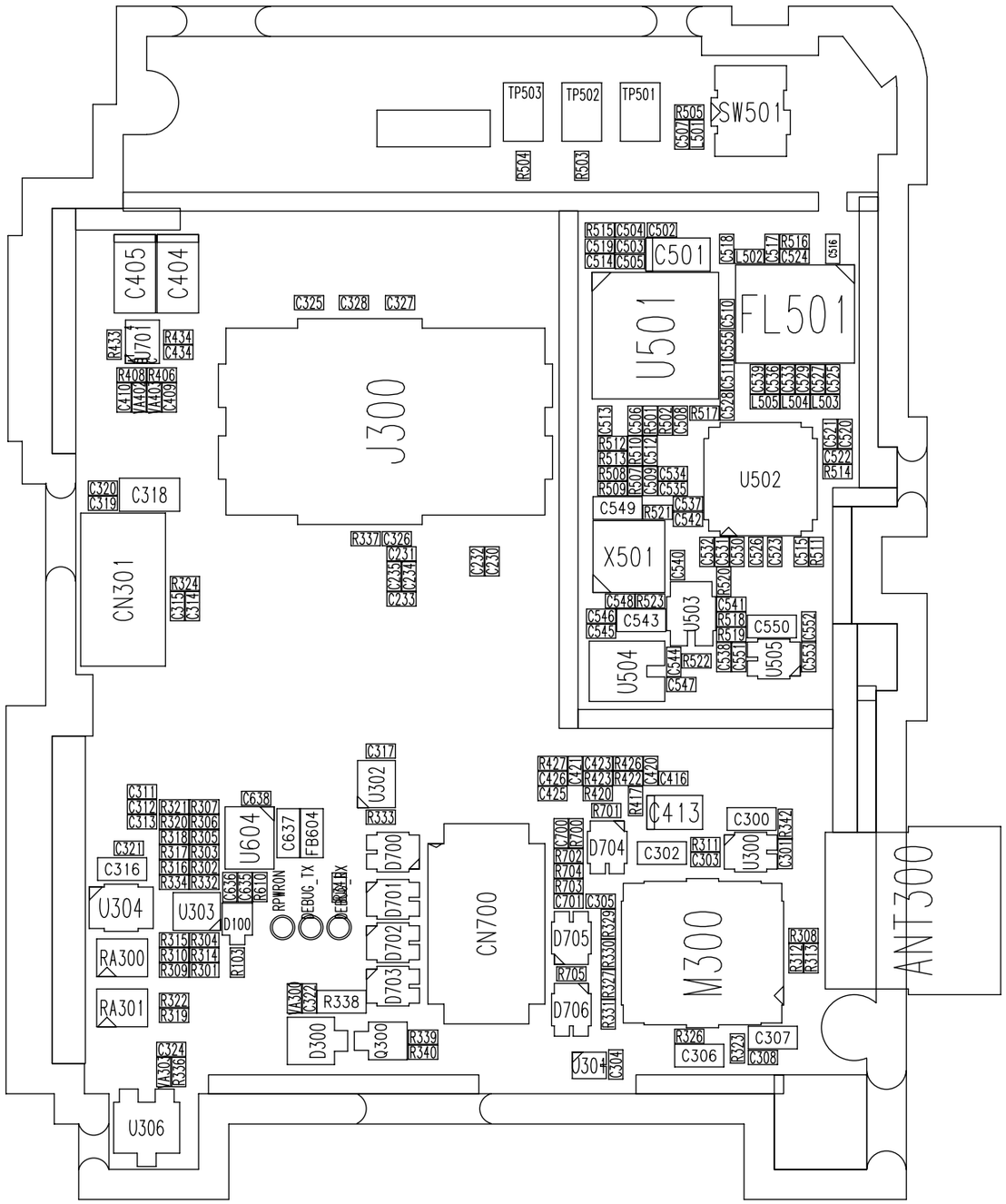

KG920 MAIN-1.0-BOTTOM

8. PCB LAYOUT

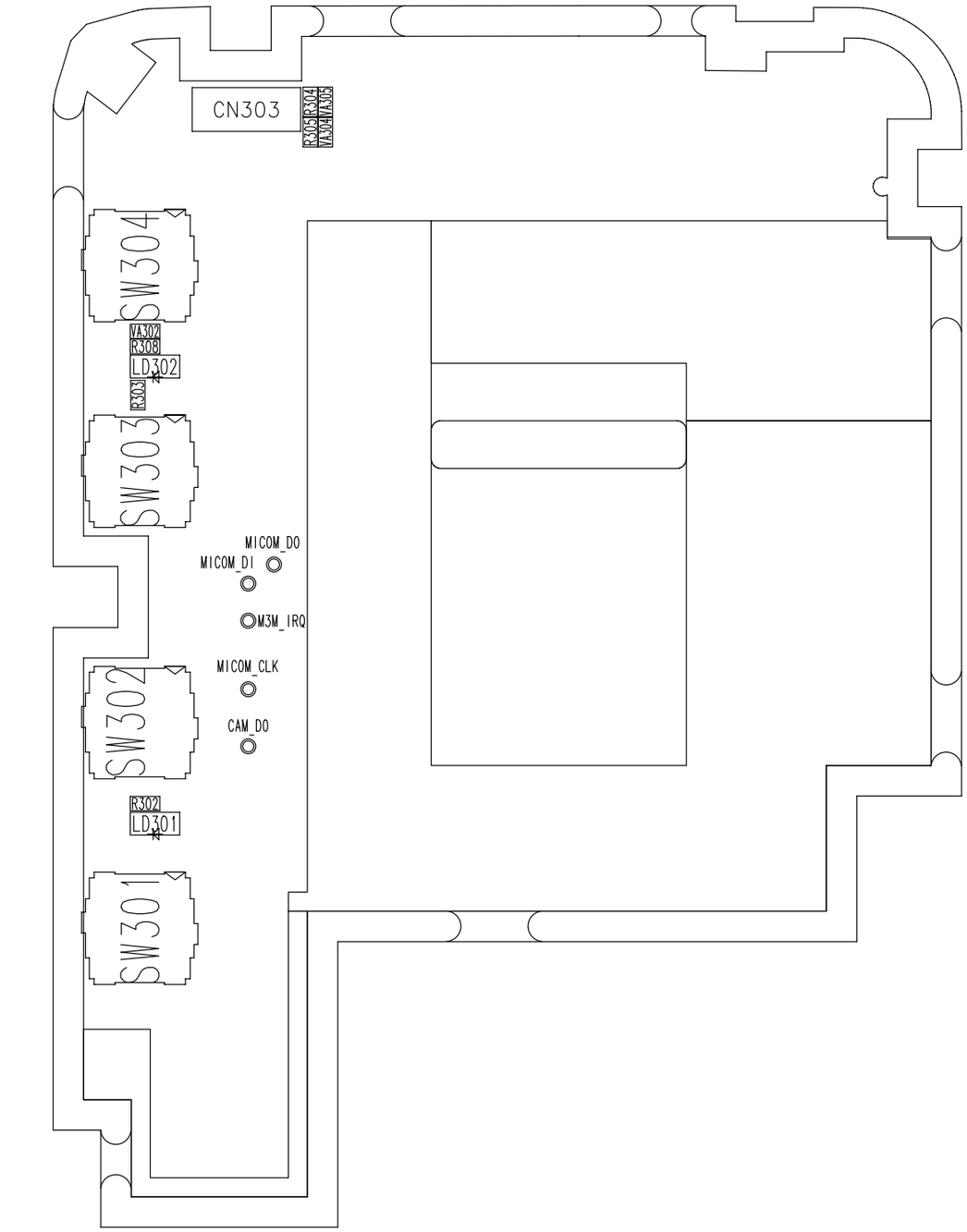

KG920-SPJY0024701-1.0-TOP

8. PCB LAYOUT

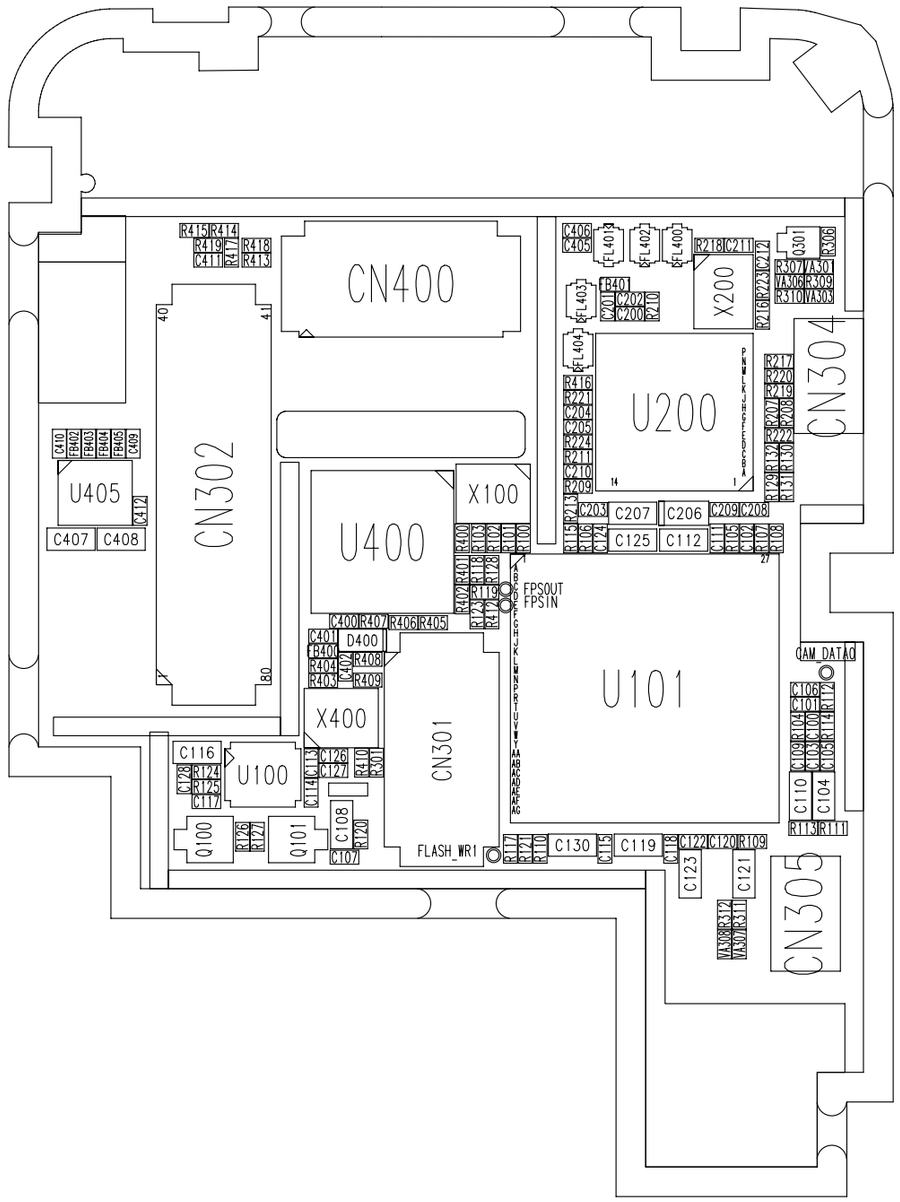

KG920-SPJY0024701-1.0-BTM

8. PCB LAYOUT

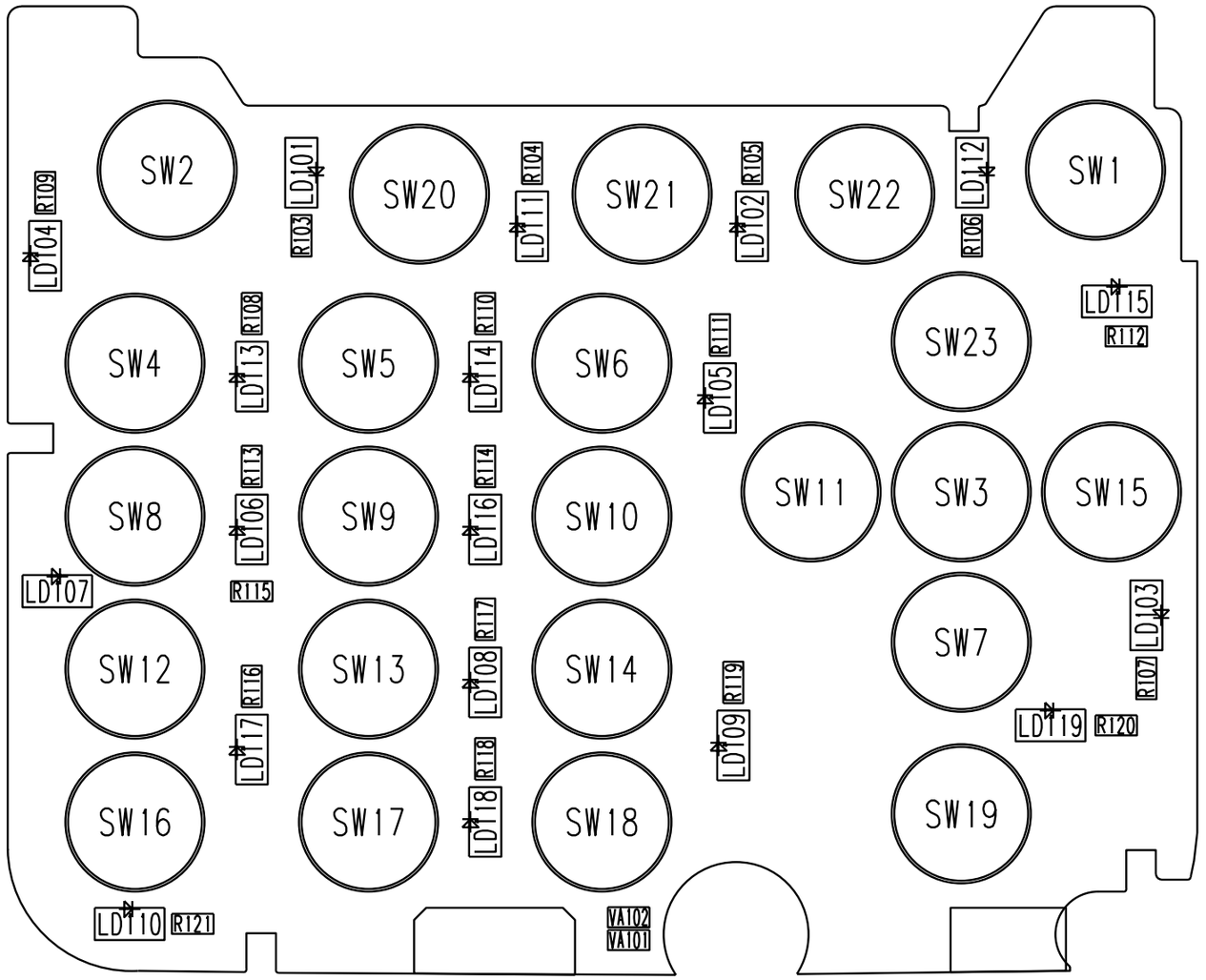

KG920-SPEY0041201-KEY-1.0-TOP

8. PCB LAYOUT

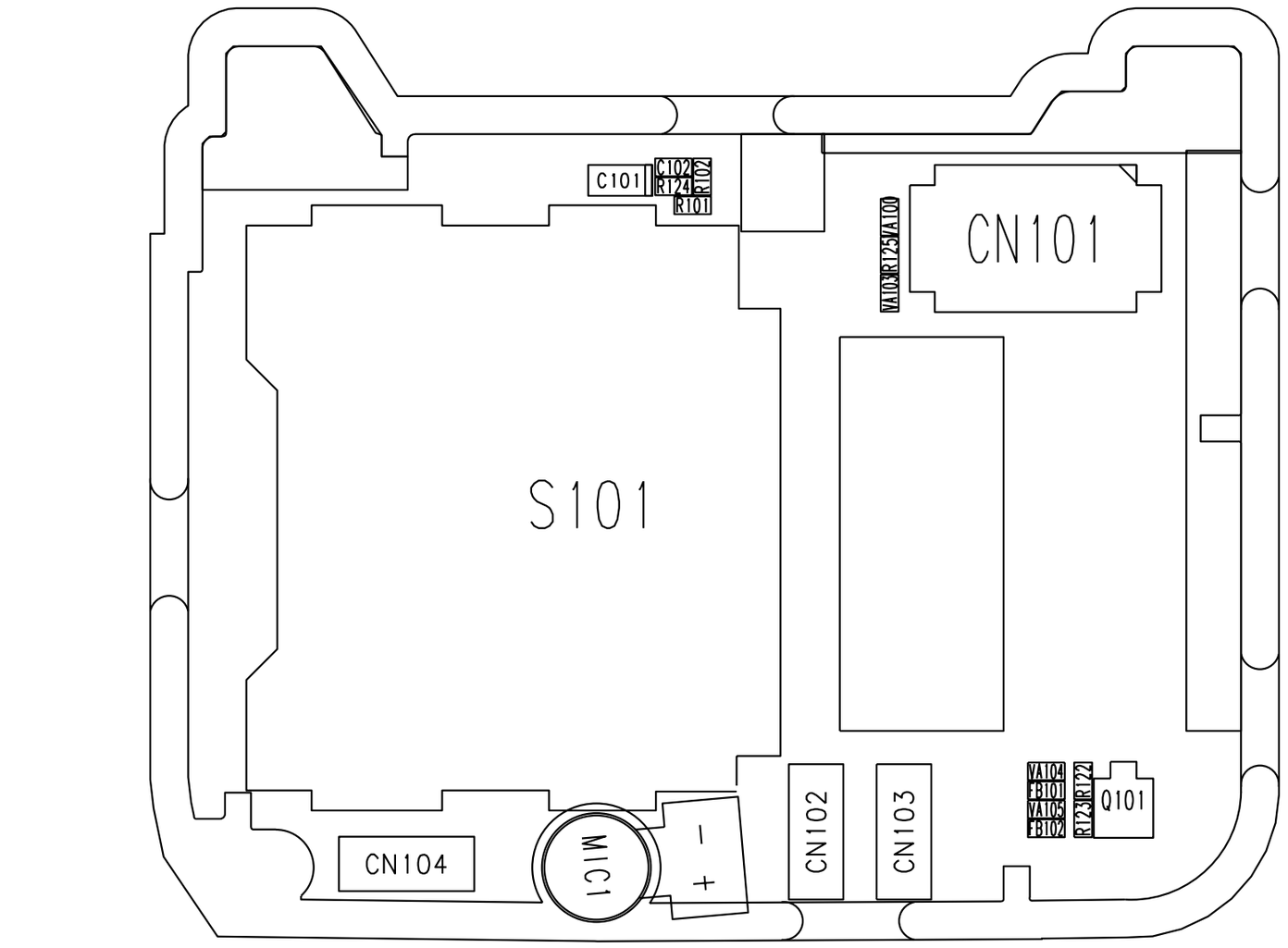

KG920-SPEY0041201-KEY-1.0-BTM

8. PCB LAYOUT

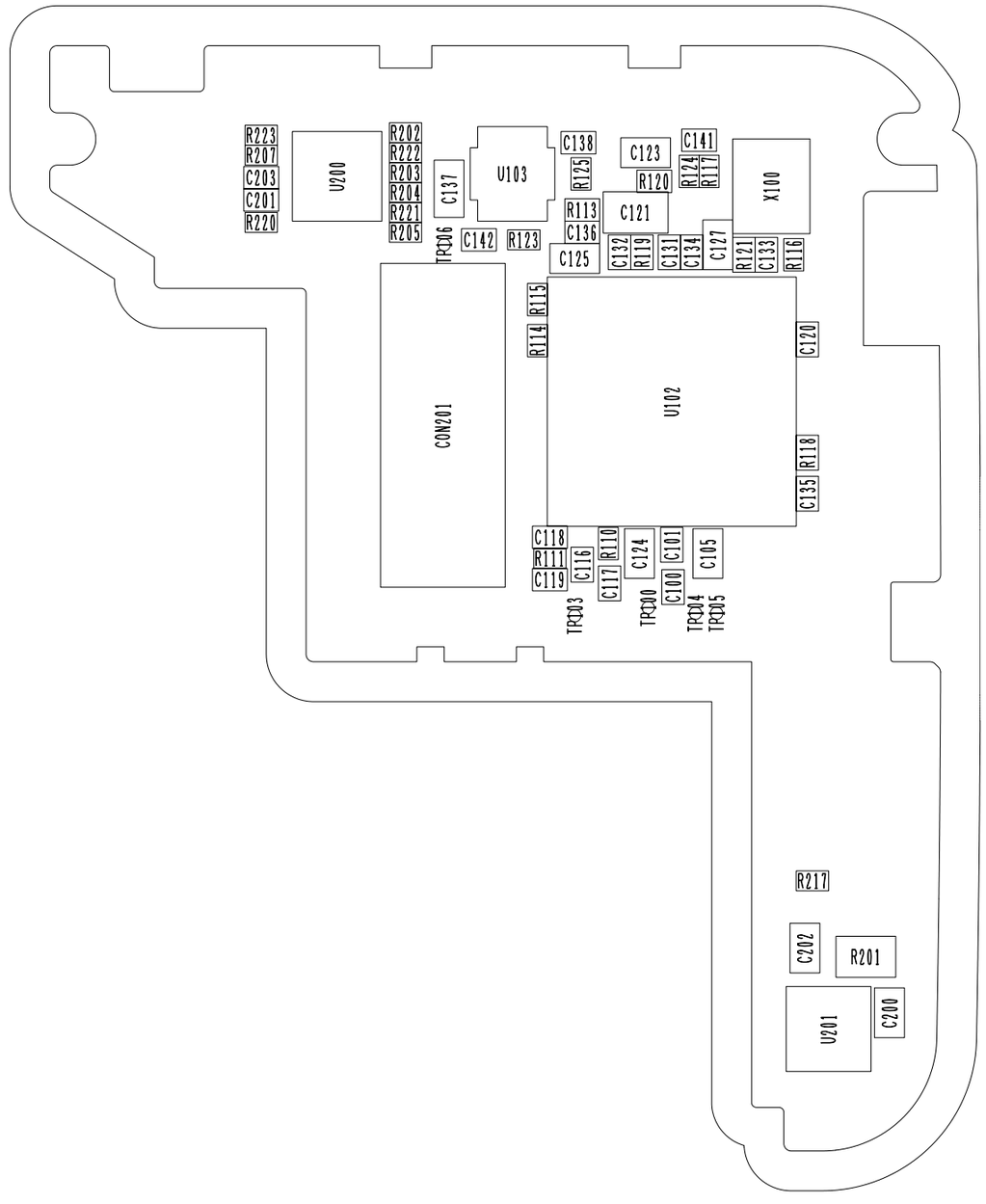
R223
R207
C203
C201
R220
U200
R202
R222
R203
R204
R221
R205
C137
U103
C138
R125
C123
R120
C141
R124
R117
X100
R113
C136
C121
C142
R123
TP006
C125
C132
R119
C131
C134
C127
R121
C133
R116
R115
R114
CON201
U102
C120
R118
C135
C118
R111
C119
C116
R110
C117
C124
C101
C100
C105
TP013
TP000
TP014
TP015
R217
C202
R201
U201
C200

8. PCB LAYOUT

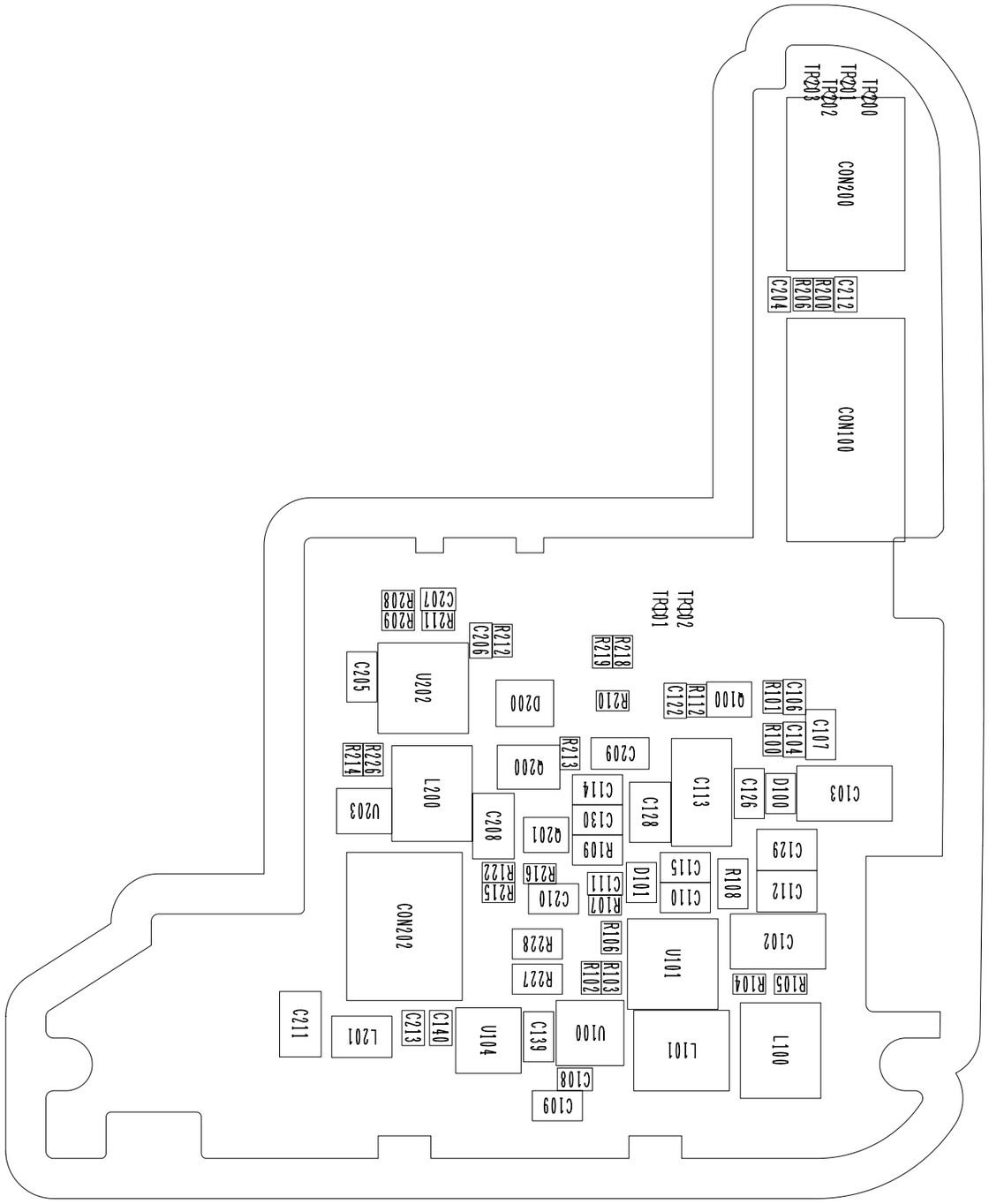

TP200
TP201
TP202
TP203
CON200
C212
R200
R206
C204
CON100
TP202
TP201
R208
R209
C207
R211
C206
R212
R218
R219
C205
U202
D200
R210
C122
R112
Q100
R101
C106
C104
R100
C107
R226
R214
L200
Q200
R213
C209
C113
C126
D100
C103
U203
C208
C114
C130
C128
Q201
R109
C129
R122
R216
R215
C210
C111
R107
D101
C115
C110
R108
C112
CON202
R228
R106
U101
C102
R227
R102
R103
R104
R105
C211
L201
C213
C140
U104
C139
U100
L101
L100
C108
C109